PAGE	364

BY	CHK	REVISION RECORD MODIFICATIONS	DATE	REV.
ALLEN		RELEASE TO PRODUCTION	2007,9,10	1.0

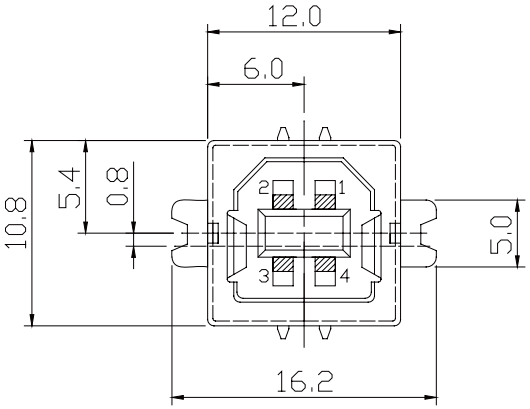

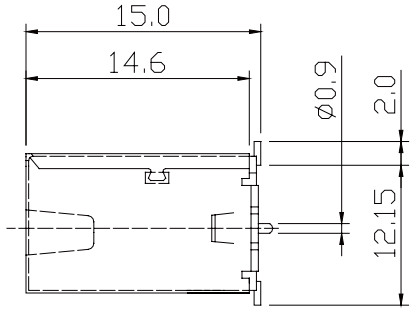

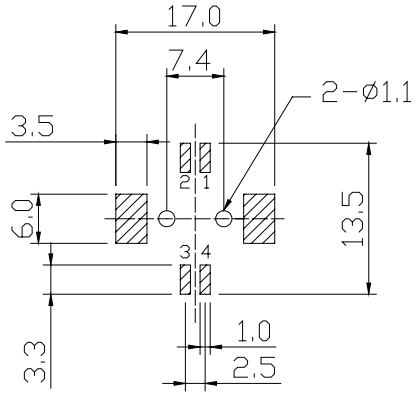

(COMPONENT SIDE)
PCB LAYOUT

Part No.: USB-001KH-B □ -U

B :Black W :White

No.	NAME	MATERIAL	FINISH	REMARK	Q'TY
1	HOUSING	NYLON PA9T G.F.	BLACK/WHITE		1
2	PIN TERM.	COPPER ALLOY T:0.25	GOLD/TIN PLATED	NI:1~1.5u, TIN:3u. GOLD:1~3 "	4
3	SHELL	BRASS T:0.3	NICKEL PLATED	NI:2~3u	1

APPRO	CHECK	DRAWN	PART NO.	Part No.:USB-001KH-B-U			DESCRIPTION
			ITEM NO.				
			DRAW NO.				
			UNIT	mm	SCALE	no	
			TOLER		NO.		

Tel: 0769 22020068 Fax: 0769 22020069 E-mail: sales@vigortec.com